R-2000*i*C/165F

Max. load capacity at wrist: **165 kg**

Max. reach: **2655 mm**

Controlled axes	Repeatability (mm)	Mechanical weight (kg)	Motion range (°)						Maximum speed (°/s)						J4 Moment/ Inertia (Nm/kgm2)	J5 Moment/ Inertia (Nm/kgm2)	J6 Moment/ Inertia (Nm/kgm2)
			J1	J2	J3	J4	J5	J6	J1	J2	J3	J4	J5	J6			
6	± 0.05*	1090	370	136	312	720	250	720	130	115	125	180	180	260	940/120	940/120	490/100

Working range

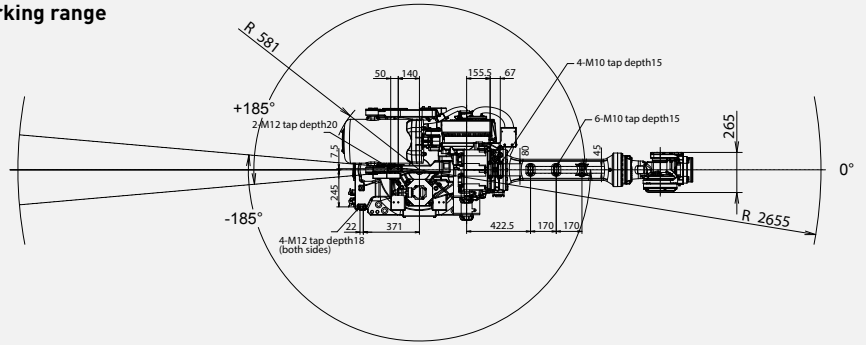

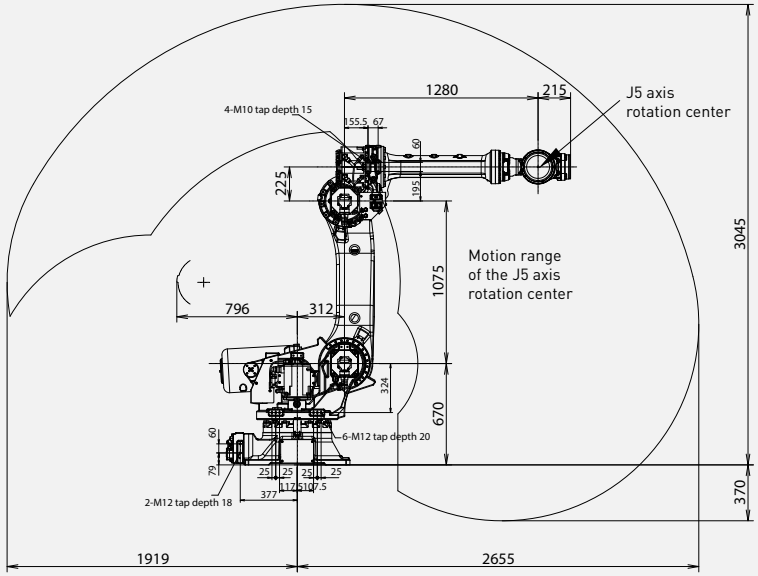

Robot	**R-2000*i*C/165F**
Robot footprint [mm]	771 X 610
Mounting position Floor	●
Mounting position Upside down	-
Mounting position Angle	-
Controller	**R30*i*B Plus**
Open air cabinet	-
Mate cabinet	○
A-cabinet	●
B-cabinet	○
*i*Pendant Touch	●
Electrical connections	
Voltage 50/60Hz 3phase [V]	380-575
Voltage 50/60Hz 1phase [V]	-
Average power consumption [kW]	2.5
Integrated services	
Integrated signals on upper arm In/Out	8/8
Integrated air supply	2
Environment	
Acoustic noise level [dB]	70.5
Ambient temperature [° C]	0-45
Protection	
Body standard/optional	IP54/IP56
Wrist & J3 arm standard/optional	IP67

● standard ○ on request - not available [ ] with hardware and/or software option

*Based on ISO9283

Technical information subject to changes without prior notice. All rights reserved. ©2017 FANUC Europe Corporation